USN | | | | | | | | | | |

RV COLLEGE OF ENGINEERING®

(An Autonomous Institution affiliated to VTU)

III Semester B. E. Examinations Nov/Dec-19

Common to EC / TE / EE / EI

ANALYSIS AND DESIGN OF DIGITAL CIRCUITS

Time: 03 Hours ***Maximum Marks: 100***

Instructions to candidates:

1. Answer all questions from Part A. Part A questions should be answered in first three pages of the answer book only.
2. Answer FIVE full questions from Part B. In Part B question number 2, 7 and 8 are compulsory. Answer any one full question from 3 and 4 & one full question from 5 and 6

PART-A

1	1.1	A $CMOS$ logic gate in a particular logic family has the following specifications : $V_{th} = 1V, V_{IH} = 3.5V, V_{IL} = 1.5V, V_{OH} = 4.5V$ and $V_{OL} = 0.5V$. the high and low noise margin of a gate are _____ and _____.	02
	1.2	Define figure of merit of logic IC.	02
	1.3	The fastest digital IC logic family is _____.	01
	1.4	The minterms covered by Boolean function realized by the logic circuit shown in fig 1.4 are _____. 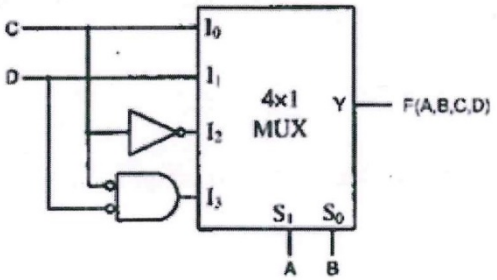 Fig 1.4	01
	1.5	Where encoders and decoders are used?	02
	1.6	What is race around condition in a JK flip Flop?	02
	1.7	The frequency of the clock signal applied to the rising edge triggered D-FF shown in fig 1.7 below is $10kHz$. The frequency of the signal available at Q is _____. 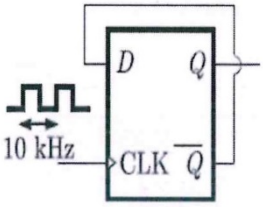 Fig 1.7	01
	1.8	What is the frequency of the output of the eight FF when the input clock frequency is 512 kHz?	02
	1.9	Write the characteristics equation for a $T - FF$.	01
	1.10	A Sequential circuit with 3 FFs will have _____ number of possible states.	01

	1.11	A ring counter consists of n flip flops, the number of states is equal to _____.	01
	1.12	A priority encoder has 8 active-LOW inputs (I_7 to I_0) and 3-active-LOW outputs (a,b,c). What would be the state of the three outputs if inputs 4 and 5 are LOW and all other inputs are $HIGH$ when the priority is from I_7 to I_0?	01
	1.13	The control word of a processor unit is partitioned into _____ fields.	01
	1.14	A 4-bit ripple counter consists of flip-flops, where each has a propagation delay of $15ns$. For the counter to recycle from 1111 to 0000, it takes a total of _____ nS.	01
	1.15	If a counter using 11 Flip Flops is initially at 0. The value of the count it holds after 2064 pulses is _____.	01

PART-B

2	a	List out the basic properties of a digital logic gate, with a diagram, explain the operation of a $CMOS\ NOR$ gate.	08
	b	Simplify the given Boolean expression using Quine-McClusky method. $F(w,x,y,z) = \sum m(0,3,5,6,7,10,12,13) + d(2,9,15)$	06
	c	Define Fan-in and Fan-out of the gate.	02
3	a	What is digital Multiplexer? Explain a 4-line to 1-line multiplexer with logical symbol, logic diagram and function table.	08
	b	Design a BCD-to excess 3 code converter using 4-bit full adder.	04
	c	Explain a 4-bit binary parallel adder with a neat diagram.	04
		OR	
4	a	Implement the following Boolean expression using $8 \times 1\ MUX$ $$F(A,B,C,D) = \sum m(0,2,4,6,7,9,10)$$	08
	b	What is Magnitude comparator? Design a 2 bit magnitude comparator and realize using suitable logic gates.	08
5	a	Design $D-FF$ using $NAND$ gates and explain its operation using relevant characteristic table and characteristic equation.	08
	b	Explain the flip flop excitation table of $RS-FF, JK-FF, D-FF$ and $T-FF$.	08
		OR	
6	a	Construct a 4-bit binary ripple counter and write its count sequence.	06
	b	Design a serial adder using a sequential –logic procedure.	06
	c	Construct a 4-bit Johnson counter with count sequence.	04
7	a	Design Synchronous Mod-6 counter using clocked JK-FlipFlops.	08

	b	For a sequential circuit shown in fig 7a, write next state equations, state table and state diagram. 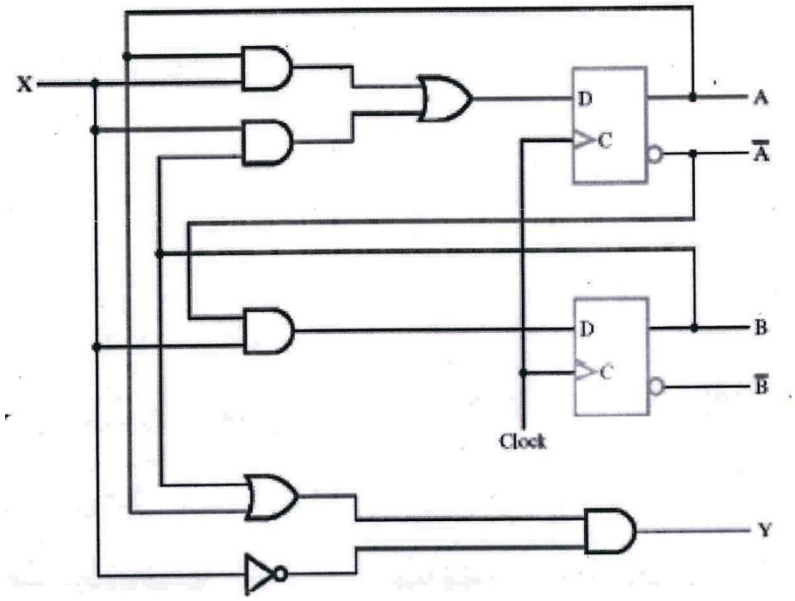 Fig 7a	08
8	a	Describe the bus organization of processor registers and *ALU* with a neat diagram.	06
	b	Explain the organization of Processor unit employing a scratch pad memory.	06
	c	What is a status register? Mention the importance of carry, overflow and zero flag.	04